PFA131

Junction Box



Features

- Material: Aluminum & SECC
- Junction Box
- Neat & Integrated design

Specifications

Model	**PFA131**
General	
Material	Aluminum & SECC
Product Dimension	ϕ138mm x 42mm
Pipe Thread	M20(G1/2")
Operating Temperature	-40°C ~60°C
Humidity	0~90% RH
Load Bearing	3.0Kg
Weight	0.40Kg
Applicable Model	Please see "Accessory Selection"

PFA131

Dimensions (mm)

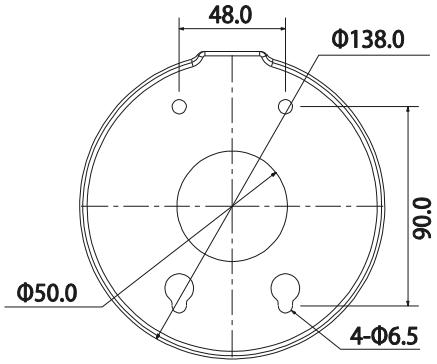

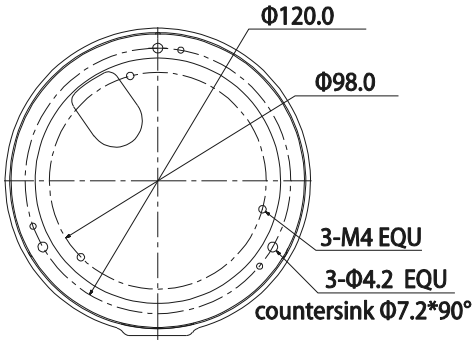

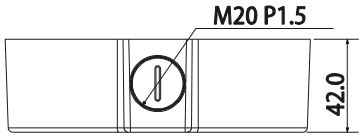

Application

