DS-2DF7C442IXG1-ELWY
4MP 42 × DarkFighter IR Network Speed Dome



Hikvision has been dedicated to develop products with security since established.
Hikvision always follows security by design principle and has adopted many methods of security technologies into our product development lifecycle, including terminal security, data security, application security, network security, and privacy protection. In the meantime, the security technologies used by Hikvision are all in compliance with local applicable laws and safety regulations. These security measures could enhance product's cyber security defense capability and protect your devices as well as your data from malicious cyber attacks.

- 1/1.8" Progressive Scan CMOS
- High quality imaging with 4 MP resolution
- Excellent low-light performance via DarkFighter 2.0 technology
- Clear imaging against strong back light due to 150 dB AWDR technology
- 42 × optical zoom and 16 × digital zoom provide close up views over expansive areas
- Expansive night view with up to 400 m IR distance
- Water and dust resistant (IP67) and vandal proof (IK10) excluding glass window
- Supports face capture to detect, capture, grade, and select faces in motion
- Supports road traffic to detect vehicles
- Smart Pan-Tilt Correction

▪ Specification

Camera	
Image Sensor	1/1.8" progressive scan CMOS
Min. Illumination	Color: 0.0003 Lux @ (F1.2, AGC ON), B/W: 0.0001 Lux @ (F1.2, AGC ON), 0 Lux with IR
Shutter Speed	1/1 s to 1/30,000 s
Slow Shutter	Yes
Day & Night	IR cut filter
Zoom	42x optical, 16x digital
Max. Resolution	2688 × 1520
Lens	
Focus	Auto, semi-auto, manual, rapid focus
Focal Length	6.0 mm to 252 mm, 42× Optical
Zoom Speed	Approx. 4.5 s (optical, wide-tele)
FOV	Horizontal field of view: 56.6° to 1.7°(wide-tele), vertical field of view: 33.7° to 0.9°(wide-tele), diagonal field of view: 63.4° to 1.9°(wide-tele)
Aperture	Max. F1.2
Illuminator	
Supplement Light Type	IR
Supplement Light Range	IR Distance: up to 400 m
Smart Supplement Light	Yes
PTZ	
Movement Range (Pan)	360°, Smart Pan-Tilt Correction
Movement Range (Tilt)	-20° to 90° (auto flip), Smart Pan-Tilt Correction
Pan Speed	Pan speed: configurable from 0.1° to 160°/s; preset speed: 240°/s
Tilt Speed	Tilt speed: configurable from 0.1° to 120°/s, preset speed 200°/s
Proportional Pan	Yes
Presets	300
Patrol Scan	8 patrols, up to 32 presets for each patrol
Pattern Scan	4 pattern scans, record time over 10 minutes for each scan
Power-off Memory	Yes
Park Action	Preset, pattern scan, patrol scan, auto scan, tilt scan, random scan, frame scan, panorama scan
3D Positioning	Yes
PTZ Status Display	Yes
Preset Freezing	Yes
Scheduled Task	Preset, pattern scan, patrol scan, auto scan, tilt scan, random scan, frame scan, panorama scan, dome reboot, dome adjust, aux output
Video	
Main Stream	50 Hz: 50 fps (2688 × 1520, 2560 × 1440), 100 fps (1920 × 1080, 1280 × 960, 1280 × 720); 60 Hz: 60 fps (2688 × 1520, 2560 × 1440), 120 fps (1920 × 1080, 1280 × 960, 1280 × 720) *High frame rate is supported under monitoring mode only.
Sub-Stream	50 Hz: 25 fps (704 × 576, 640 × 480, 352 × 288) 60 Hz: 30 fps (704 × 480, 640 × 480, 352 × 240)

Third Stream	50 Hz: 25 fps (1920 × 1080, 1280 × 960, 1280 × 720, 704 × 576, 640 × 480, 352 × 288) 60 Hz: 30 fps (1920 × 1080, 1280 × 960, 1280 × 720, 704 × 480, 640 × 480, 352 × 240)
Video Compression	Main stream: H.265+/H.265/H.264+/H.264 Sub-stream: H.265/H.264/MJPEG Third stream: H.265/H.264/MJPEG
Video Bit Rate	32 Kbps to 16384 Kbps
H.264 Type	Baseline Profile/Main Profile/High Profile
H.265 Type	Main Profile
Scalable Video Coding (SVC)	H.264 and H.265 encoding
Region of Interest (ROI)	8 fixed regions for each stream
Target Cropping	No
Audio	
Audio Compression	G.711alaw, G.711ulaw, G.722.1, G.726, MP2L2, PCM
Audio Bit Rate	64 Kbps (G.711)/16 Kbps (G.722.1)/16 Kbps (G.726)/32 to 192 Kbps (MP2L2)
Audio Sampling Rate	MP2L2: 16kHz, 32kHz, 48kHzAAC-LC: 16kHz, 32kHz, 48kHzPCM: 8kHz, 16kHz, 32kHz, 48kHzMP3: 8kHz, 16KHz, 32KHz, 48KHz
Environment Noise Filtering	Yes
Network	
Smooth Streaming	Yes
Security	Password protection,complicated password,HTTPS encryption,802.1X authentication (EAP-TLS, EAP-LEAP, EAP-MD5),watermark,IP address filter,basic and digest authentication for HTTP/HTTPS,WSSE and digest authentication for Open Network Video Interface, RTP/RTSP over HTTPS,control timeout settings,security audit log,TLS 1.3,host authentication (MAC address),TPM 2.0 (FIPS 140-2 level 2)
Network Storage	NAS (NFS, SMB/ CIFS), ANR
Protocols	IPv4/IPv6, HTTP, HTTPS, 802.1x, Qos, FTP, SMTP, UPnP, SNMP, DNS, DDNS, NTP, RTSP, RTCP, RTP, TCP/IP, DHCP, PPPoE, UDP, IGMP, ICMP, Bonjour
API	ISUP, ISAPI, Hikvision SDK, Open Network Video Interface (Profile S, Profile G, Profile T, Profile M), OTAP
Simultaneous Live View	Up to 20 channels
User/Host	Up to 32 users. 3 levels: Administrator, Operator and User
Client	HikCentral, iVMS-4200, Hik-Connect
Web Browser	IE11, Chrome 57.0+, Firefox 52.0+, Safari 11+
Image	
Image Parameters Switch	Yes
Image Settings	Saturation, brightness, contrast, sharpness, gain, and white balance adjustable by client software or web browser
Day/Night Switch	Day, night, auto, scheduled-switch
Image Enhancement	BLC, HLC, 3D DNR
Wide Dynamic Range (WDR)	150 dB WDR
Defog	Optical defog
Image Stabilization	Yes. Built-in gyroscope to improve EIS performance.
Regional Exposure	Yes
Regional Focus	Yes
Privacy Mask	Up to 24 masks, polygon region, mosaic mask, mask color configurable
SNR	≥ 52 dB

Supplement Detection	
Gyroscope	Yes
Satellite Positioning	No
Compass	No
Interface	
Reset	Yes
Ethernet Interface	1 RJ45 10M/100M self-adaptive Ethernet port
On-board Storage	Built-in memory card slot, support MicroSD/MicroSDHC/MicroSDXC, up to 1 TB
Alarm	7 inputs, 2 outputs
Audio	1 input (line in), max. input amplitude: 2-2.4 vpp, input impedance: 1 KΩ ± 10%; 1 output (line out), line level, output impedance: 600 Ω
Video Output	1.0V[p-p]/75Ω, PAL, NTSC, BNC connector
RS-485	Half duplex, HIKVISION, Pelco-P, Pelco-D, self-adaptive
Event	
Basic Event	Motion detection,video tampering alarm,exception (network disconnected, IP address conflict, illegal login, HDD full, HDD error),alarm input and output,vandal-proof alam,audio exception detection,unattended baggage detection, object removal detection
Linkage	Upload to FTP/NAS/memory card,notify surveillance center,send email,trigger recording,and PTZ actions (such as preset, patrol scan, pattern scan)
Deep Learning Function	
Perimeter Protection	Line crossing detection, region entrance detection, intrusion detection, region exiting detection
Multi-Target-Type Detection	Supports simultaneous detection and capture of human body, face and vehicle, Gets 7 face features, 14 human body features and 8 vehicle features
Face Capture	Detects up to 30 faces simultaneously, Uploads face with background and closed-up face pictures,Supports detecting, tracking, capturing, grading, selecting of face in motion, and outputs the best face picture
Face Comparison	Up to 10 face libraries. 30000 faces for each library. 150000 faces in total, Recognizes face identity via face modeling, grading and comparing to those in face library, Supports face library encryption

Road Traffic and Vehicle Detection	Smart Function: Support license plate recognition of vehicles and motorcycles (only in checkpoint scenario) Support vehicle attribute detection, including vehicle type, color, brand, driving direction, etc. Support vehicle and non-vehicle counting Blocklist and allowlist: up to 10,000 records LPR Countries/Regions: 4 areas (Europe, Middle East, Asia-Pacific, Africa) and more than 124 countries/regions Accuracy (Under recommended installation and lighting conditions): License plate recognition rate ≥98% Capture rate ≥99% Driving direction accuracy rate ≥98% Vehicle Capture Speed: Front installation in checkpoint scenario: up to 120 km/h Side installation: up to 80 km/h Capture Mode: License Plate and Vehicle Mode, Vehicle Priority Mode
Linkage and Tracking	
Smart Tracking	Manual tracking, auto-tracking 3.0
Object Tracking	Support person arming. When the device detects the armed face or human body in the monitoring scene, it triggers alarms, and tracks and captures the target. During the tracking, the target location and other related information are uploaded.Support vehicle arming. When the device detects the armed vehicles in the monitoring scene, it triggers alarms, and tracks and captures the target. During the tracking, the target location and other related information are uploaded.
General	
Vandal-proof Alarm	No
Heater	Yes
Wiper	Yes
De-icing	No
Demist	Yes
General Function	Mirror, password protection, watermark, IP address filter
Power	36 VDC± 25%, max. 60 W (Max. 50 W, including max. 10 W for IR and max. 8 W for heater) PoE 802.3bt, type3, class6, max. 60W (Max. 50 W, including max. 10 W for IR and max. 8 W for heater)
Operating Condition	Temperature: -40°C to 70°C (-40°F to 158°F), Humidity: ≤ 95%
Dimension	Ø 259.9 mm × 356.39 mm (Ø 10.23" × 14.03")
Weight	Approx. 6.7 kg (14.77 lb.)
Language	33 languages: English, Russian, Estonian, Bulgarian, Hungarian, Greek, German, Italian, Czech, Slovak, French, Polish, Dutch, Portuguese, Spanish, Romanian, Danish, Swedish, Norwegian, Finnish, Croatian, Slovenian, Serbian, Turkish, Korean, Traditional Chinese, Thai, Vietnamese, Japanese, Latvian, Lithuanian, Portuguese (Brazil), Ukrainian

Approval	
EMC	CE-EMC (EN 55032: 2015, EN 61000-3-2: 2019, EN 61000-3-3: 2013, EN 50130-4: 2011 +A1: 2014); RCM (AS/NZS CISPR 32: 2015); IC VoC (ICES-003: Issue 6, 2019); KC (KN 32: 2015, KN 35: 2015)
Safety	CB (IEC 62368-1:2014+A11); CE-LVD (EN 62368-1:2014+A11:2017), BIS (IS 13252(Part 1):2010+A1:2013+A2:2015); LOA (SANS IEC60950-1)
Environment	CE-RoHS (2011/65/EU); WEEE (2012/19/EU); Reach (Regulation (EC) No 1907/2006)
Anti-Corrosion Protection	NEMA 4X
Protection	IP67 Standard, Lightning Protection, Surge Protection and Voltage Transient Protection, ±6kV Line to Gnd, ±3kV Line to Line, IEC61000-4-5, IK10

▪ DORI

The DORI (detect, observe, recognize, identify) distance gives the general idea of the camera ability to distinguish persons or objects within its field of view.
It is calculated based on the camera sensor specification and the criteria given by EN 62676-4: 2015.

DORI	Detect	Observe	Recognize	Identify
Definition	25 px/m	63 px/m	125 px/m	250 px/m
Distance (Tele)	3475.9 m(11403.87 ft)	1379.3 m(4525.26 ft)	695.2 m(2280.84 ft)	347.6 m(1149.42 ft)

▪ Typical Application

Hikvision products are classified into three levels according to their anti-corrosion performance. Refer to the following description to choose for your using environment.

DS-2DF7C442IXG1-EL and DS-2DF7C442IXG1-ELW have NO SPECIFIC PROTECTION.
DS-2DF7C442IXG1-ELWY and DS-2DF7C442IXG1-ELY have MODERATE PROTECTION.

Level	Description
Top-level protection	Hikvision products at this level are equipped for use in areas where professional anti-corrosion protection is a must. Typical application scenarios include coastlines, docks, chemical plants, and more.
Moderate protection	Hikvision products at this level are equipped for use in areas with moderate anti-corrosion demands. Typical application scenarios include coastal areas about 2 kilometers (1.24 miles) away from coastlines, as well as areas affected by acid rain.
No specific protection	Hikvision products at this level are equipped for use in areas where no specific anti-corrosion protection is needed.

▪ Available Model

DS-2DF7C442IXG1-ELWY

▪ Dimension

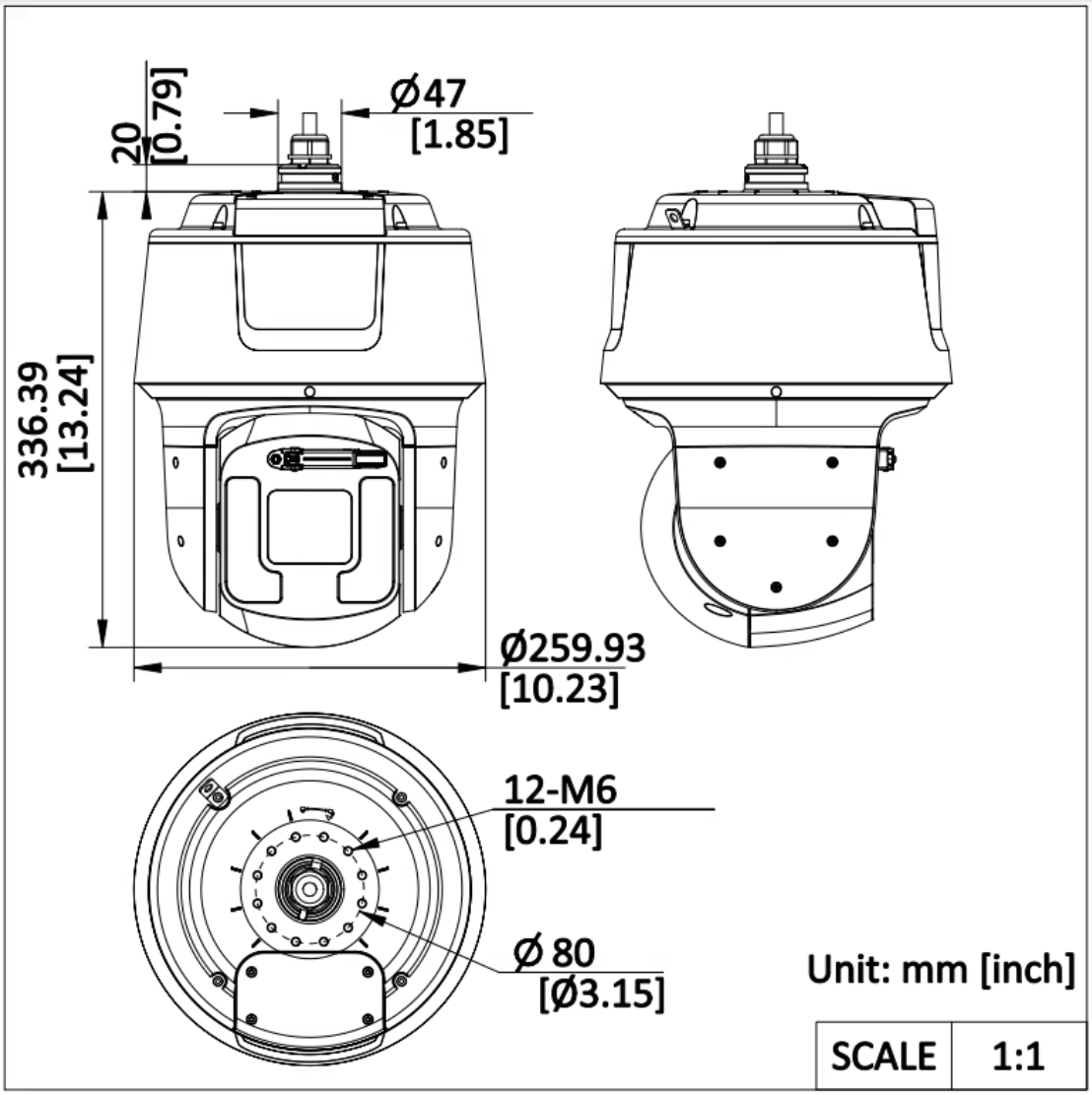

▪ Accessory

▪ Optional

DS-4603ZJ-PAAC Wall Mount Bracket In/Outdoor for PTZ Camera	DS-4612ZJ-PAAC Pendant Mount	DS-1684ZJ-P-Y For Pendant Mount	DS-1673ZJ-P-Y For Pendant Mount	DS-1276ZJ-P-Y For Corner mount
				

See Far, Go Further

www.hikvision.com
support@hikvision.com

© Hangzhou Hikvision Digital Technology Co., Ltd. Unless otherwise agreed, Hikvision makes no warranties, express or implied. We reserve the right to introduce modifications without notice.

HIKVISION®