DS-1701ZJ/BJH
Bracket

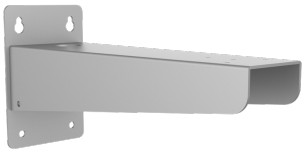

- Wall mount bracket
- Comes with 4xM8 swell screws
- Stainless steel material with surface spray treatment
- Can be used for supplemental light and new housing traffic unit
- Platinum gray color

▪ Specification

General	
Dimension	403 mm × 200 mm × 130 mm (15.86" × 7.87" × 5.12") (L × W × H)
With Package Weight	Approx. 3.4 kg (7.50 lb.)
Parameters	
Weight	2.66 kg
Maximum Load Capacity	15kg
Appearance	Platinum Gray
Material	Stainless Steel

▪ Available Model

壁装支架-DS-1701ZJ/BJH

DS-1701ZJ/BJH/316

▪ Dimension

Dimension

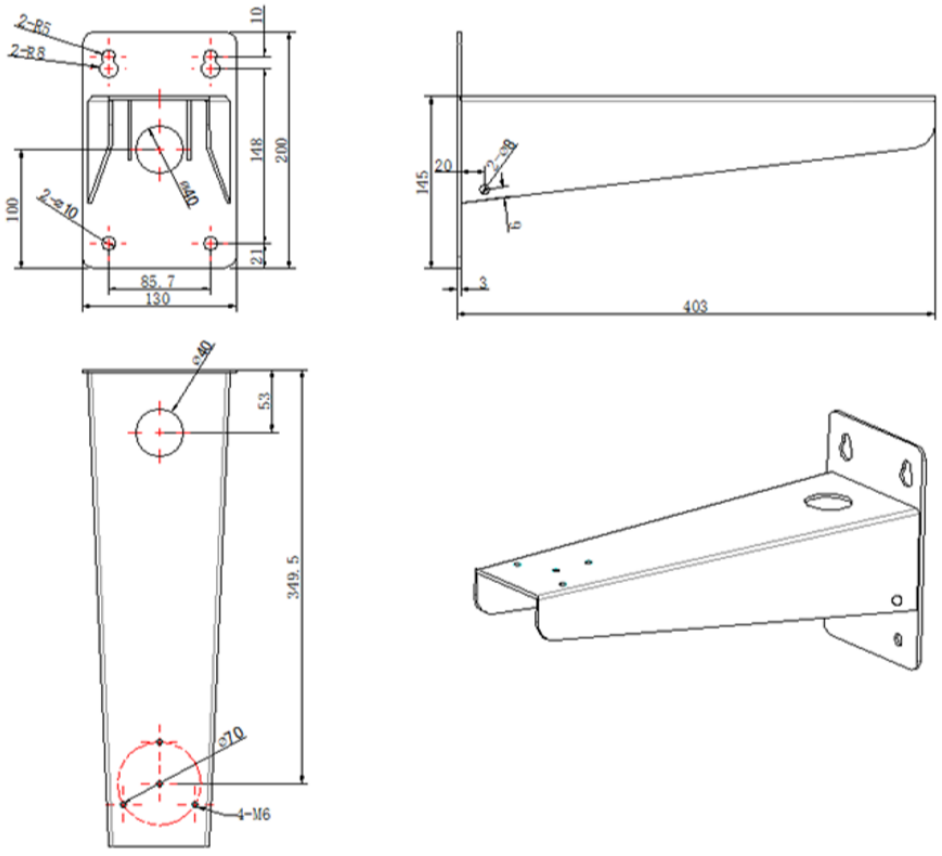

▪ Accessory



DS-TDSB00-EMM



iDS-TCM403-BI



DS-TCG405-E



iDS-TCV300-A6I



iDS-TCE900-A

iDS-TCV300-A6



iDS-TCM403-B



iDS-TCV900-AE



iDS-TCE300-A6



iDS-TCV900-AI



DS-TDSB00-EML



iDS-TCV300-A6E



DS-TCG405-EP

Headquarters
No.555 Qianmo Road, Binjiang District,
Hangzhou 310051, China
T +86-571-8807-5998
www.hikvision.com

Follow us on social media to get the latest product and solution information.

Hikvision HikvisionHQ HikvisionHQ Hikvision_Global Hikvision Corporate Channel hikvisionhq

©Hikvision Digital Technology Co., Ltd. 2023 I Data subject to change without notice I